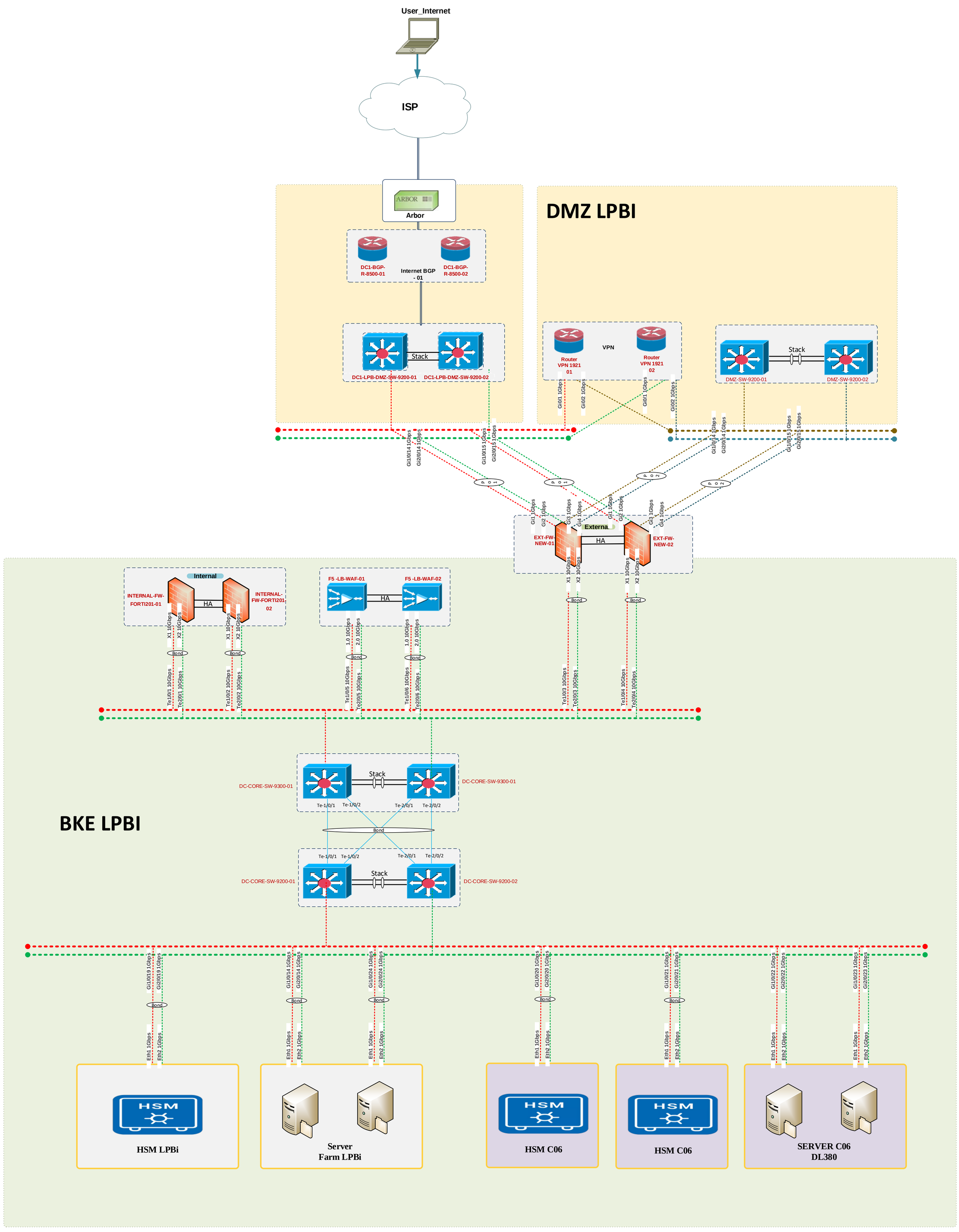
User_Internet
ISP
Arbor
DC1-BGP-R-8500-01
Internet BGP - 01
DC1-BGP-R-8500-02
Stack
DC1-LPB-DMZ-SW-9200-01
DC1-LPB-DMZ-SW-9200-02
DMZ LPBI
Router VPN 1921 01
VPN
Router VPN 1921 02
Stack
DMZ-SW-9200-01
DMZ-SW-9200-02
Gi0/1 1Gbps
Gi0/2 1Gbps
Gi1/0/14 1Gbps
Gi2/0/14 1Gbps
Gi1/0/15 1Gbps
Gi2/0/15 1Gbps
Gi1 1Gbps
Gi2 1Gbps
Gi3 1Gbps
Gi4 1Gbps
Externa
EXT-FW-NEW-01
HA
EXT-FW-NEW-02
X1 10Gbps
X2 10Gbps
Bond
Internal
INTERNAL-FW-FORTI201-01
INTERNAL-FW-FORTI201-02
F5 -LB-WAF-01
F5 -LB-WAF-02
1.0 10Gbps
2.0 10Gbps
Te1/0/1 10Gbps
Te2/0/1 10Gbps
Te1/0/2 10Gbps
Te2/0/2 10Gbps
Te1/0/5 10Gbps
Te2/0/5 10Gbps
Te1/0/6 10Gbps
Te2/0/6 10Gbps
Te1/0/3 10Gbps
Te2/0/3 10Gbps
Te1/0/4 10Gbps
Te2/0/4 10Gbps
BKE LPBI
DC-CORE-SW-9300-01
Stack
DC-CORE-SW-9300-01
Te-1/0/1
Te-1/0/2
Te-2/0/1
Te-2/0/2
Bond
DC-CORE-SW-9200-01
Stack
DC-CORE-SW-9200-02
Gi1/0/19 1Gbps
Gi2/0/19 1Gbps
Gi1/0/14 1Gbps
Gi2/0/14 1Gbps
Gi1/0/24 1Gbps
Gi2/0/24 1Gbps
Gi1/0/20 1Gbps
Gi2/0/20 1Gbps
Gi1/0/21 1Gbps
Gi2/0/21 1Gbps
Gi1/0/22 1Gbps
Gi2/0/22 1Gbps
Gi1/0/23 1Gbps
Gi2/0/23 1Gbps
Eth1 1Gbps
Eth2 1Gbps
HSM
HSM LPBi
Server Farm LPBi
HSM C06
HSM C06
SERVER C06 DL380